TIMEWATCH®
Presence perfect

Dual-View X-ray Baggage Inspection System

Ai-Scan-DV

Ai-Scan-DV X-ray security inspection system is a new generation X-ray security inspection system that integrates multi-functions such as intelligent detection, baggage connection, High-Resolution display, etc. This model is applicable to be deployed in scenarios such as customs, office buildings, large events, courts, prisons, embassies, factories, schools, hospitals, public places, etc. The size of the tunnel is suitable for boarding suitcase, small parcels, backpacks, envelopes, handbags, etc.

- Material Classification: Advanced material discrimination technology to recognize different materials and assign different colors (3 or 6 colors).
- Intelligent Recognition: Integrated with the advanced detection algorithm, which could detect more than 35 major types of target objects and alarm on them automatically.
- HD Image: Integrated with the new generation of image processing system, which could provide with a clearer X-ray image with high resolution.
- Variable Speed: One-click to switch the conveyor speed to fit different application scenarios.
- Remote Management: Network integration supported real time status, X-ray images, videos, alarm information can be viewed remotely through internet, and report can be viewed and downloaded remotely for better management process.

Features

- AI-Based
- Baggage Recording
- Dual View
- High Resolution Color Display
- Sound & Light Alarm
- Multi Energy
- Baggage Counter
- Scan Palletized Load

Technical Specification

Dimensions	
Tunnel Dimensions	620 mm (W) × 420 mm (H)
System Dimensions	2311 mm (L) × 1172 mm (W) × 1260 mm (H)
General Specifications	
Conveyor Height	600 mm
Conveyor Speed	0.2 m/s, 0.3 m/s, 0.4m/s adjustable
Max. Conveyor Capacity	165 kg (Even Distributed)
Performance	
Wire Resolution	38/40 AWG
Penetration (Steel)	34/35 mm
X-ray Generator	
Number of Generators	2
Anode Voltage / Current	160KV
Cooling / Working cycle	Oil-cooling / Continuous
Health and Safety	
External dose rate	< 0.5 μSv/h (50mm Distance to the Housing)
Radiation level	0.1 mR/h (at 5cm)
Film Safe	Guaranteed up to ISO1600
Detection Algorithm	
Prohibited Goods Detection	35 Major Types, over 64 categories
Others	Shield Alarms, etc.
Integrated Cameras	
Cameras	3 Camera, Resolution: 1920x1080
Sensor Type	1/2.8" Progressive Scan CMOS
Video Compression Standard	H.265 / H.264 / MJPEG

Installation Data	
Power Consumption	< 1.0 KVA
Power Supply	AC 220V (-15% to +10%) , 50Hz/60Hz (±3Hz)
Noise level	< 60 dB
Operating Temperature / Humidity	5 ˚C to 40 ˚C / 5 % to 95 % (non-condensing)
Storage Temperature / Humidity	-20 ˚C to 60 ˚C / 5 % to 95 % (non-condensing)
Weight	800 Kg
Additional Features	
Image Processing	Color / Black & White(C/B&W), Organic Stripping (ORG-), Inorganic Stripping(INORG-), Negative, High/ Low penetration (H/L), Absorptivity increase(ABS+), Absorptivity decrease (ABS-), Super Enhancement (SEN), Edge Enhancement(Edge), 64x seamless zoom in and out, etc.
Software Functions	Professional TIP system, Operation Intro, Photo and X-ray image connection, etc
Operation Display	21.5 inch Screen x 2
Storage	100,000 +

Dimension Drawing

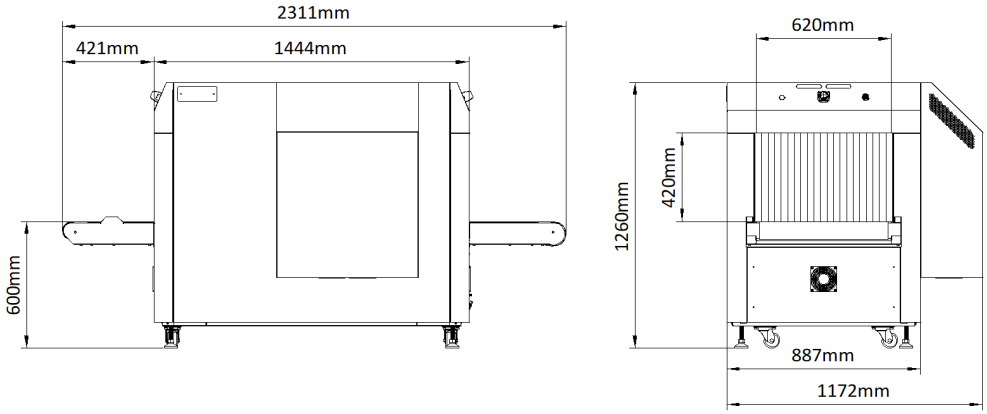

Application

Airport | Railways | Defense | Education | Hospital | Government | Office | Bank | Retail

Disclaimer : All pictures shown are for illustration purposes only. The actual product and color may vary due to product enhancement. The brief specification is mentioned and may change without prior notice. Please consult us before placing any order.